# QPOD™ - STANDARD DETAILING CONTINUOUS

QPOD
EARTH-FRIENDLY FOUNDATIONS

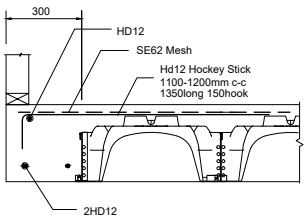


PERIMETER - LIGHTWEIGHT

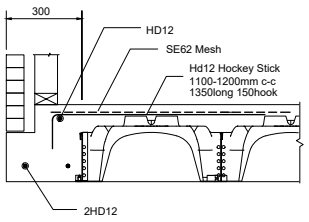


PERIMETER - REBATE HEAVY

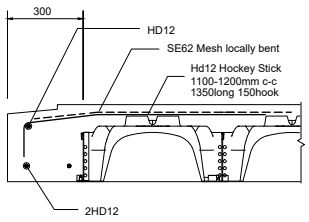


PERIMETER - REBATE GARAGE

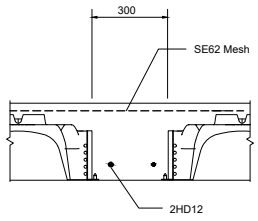


STIFFENING

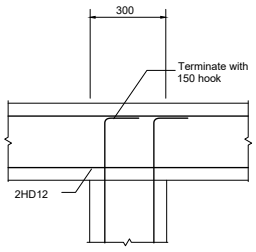


STIFFENING

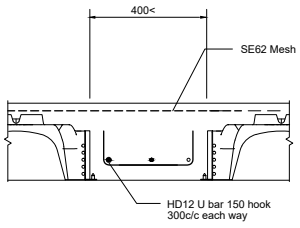


MASS CONCRETE

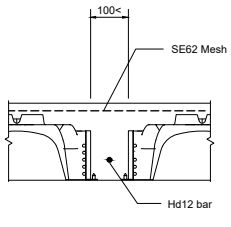


100mm RIB DETAIL (For Raft)

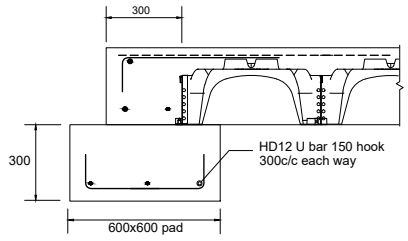


PERIMETER POINT LOAD

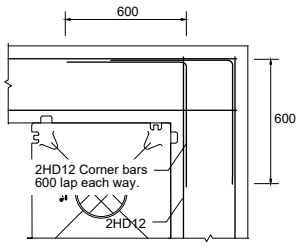


CORNER

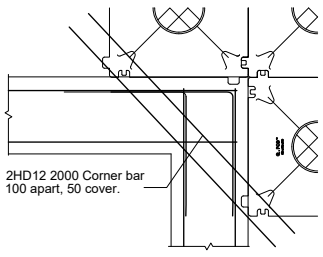


RE-ENTRANT CORNER TOP STEEL

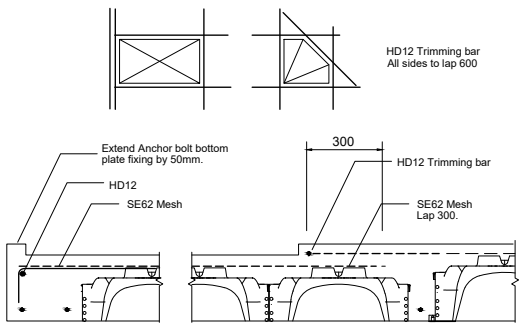


SHOWER REBATE WITH MESH

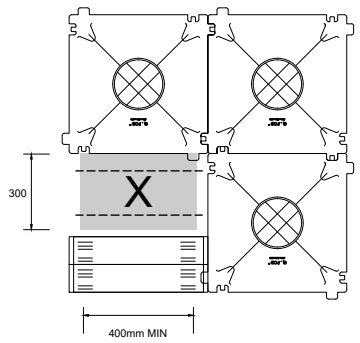


LOAD POINT - UP TO 20kN

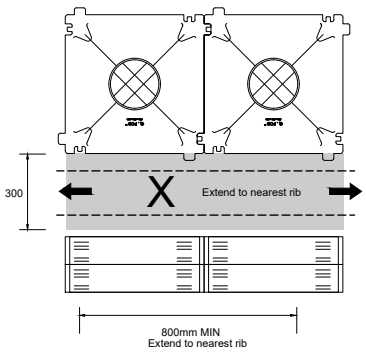


20kN< LOAD POINT - UP TO 30kN

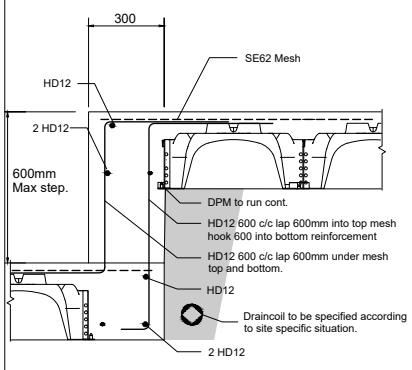


STEP DOWN - IN CONCRETE

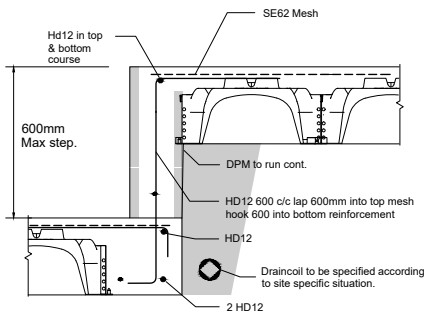


STEP DOWN - IN MASONRY

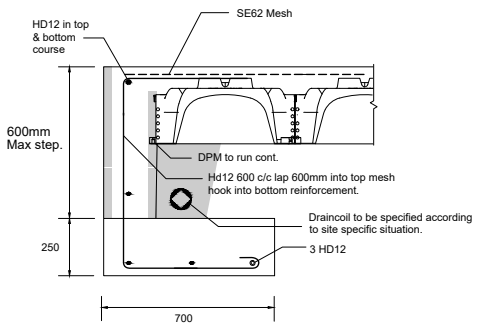


STEP DOWN - PERIMETER

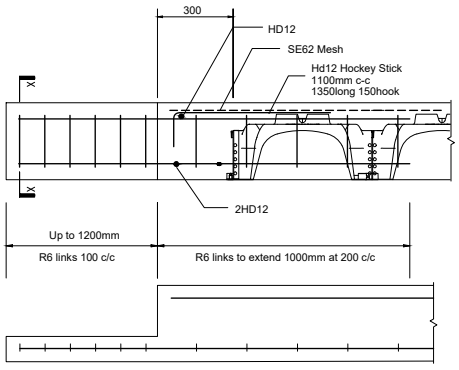


WINGWALL

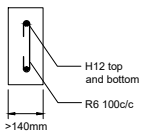


CROSS SECTION X-X

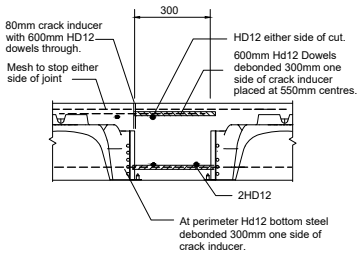


FREE JOINT - CONTINUOUS TYPE - SIDE

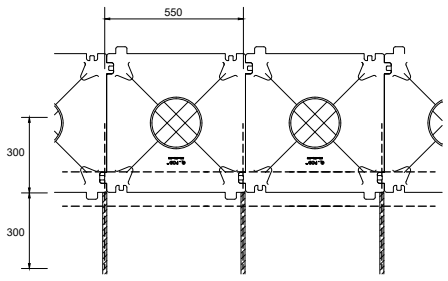


FREE JOINT - CONTINUOUS TYPE - TOP

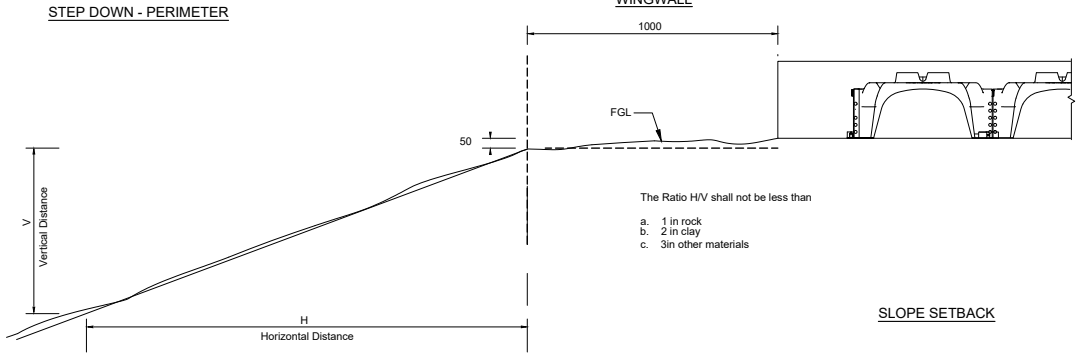


SLOPE SETBACK

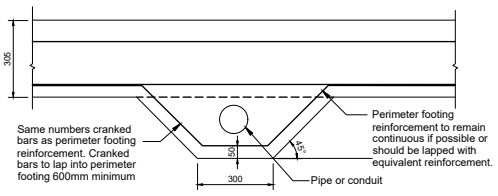


Typical deepened edge penetration detail where cover cannot be achieved for bottom reinforcement.

OR

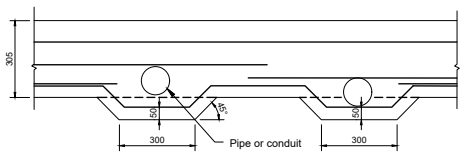


D1 PERIMETER - DEEPENED PENETRATION

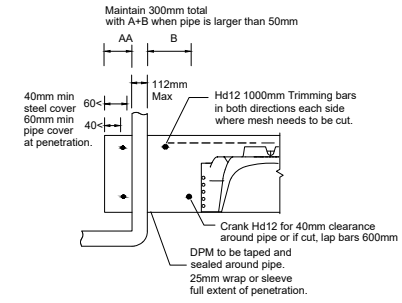


PERIMETER - VERTICAL PENETRATION OVER 50mm

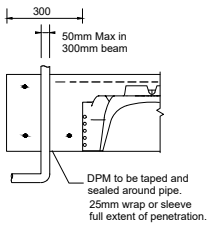


PERIMETER - VERTICAL PENETRATION <50mm

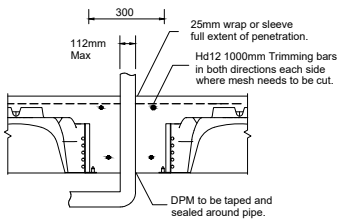


THICKENING - VERTICAL PENETRATION

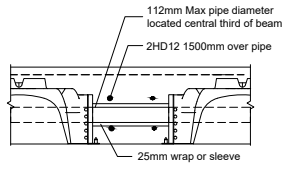


THICKENING - HORIZONTAL PENETRATION

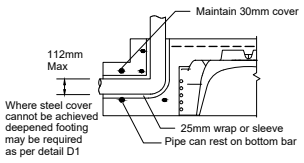


PERIMETER - HORIZONTAL PENETRATION

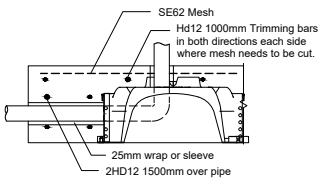


PERIMETER - HORIZONTAL PENETRATION

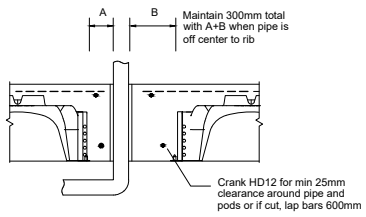


THICKENING - VERTICAL PENETRATION OFFSET

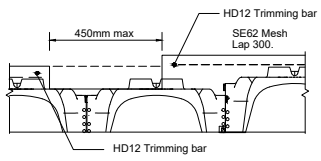


SHOWER TRAP VOID

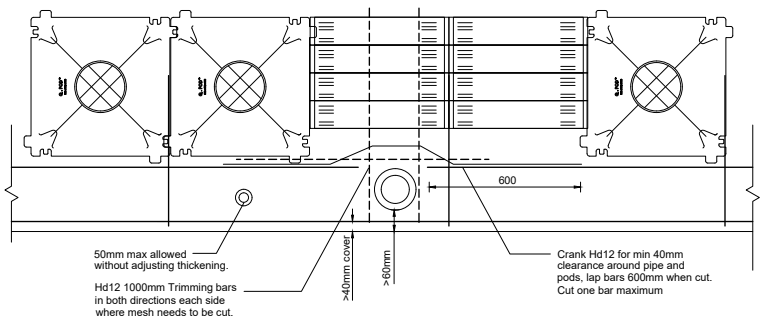


PERIMETER - PENETRATIONS

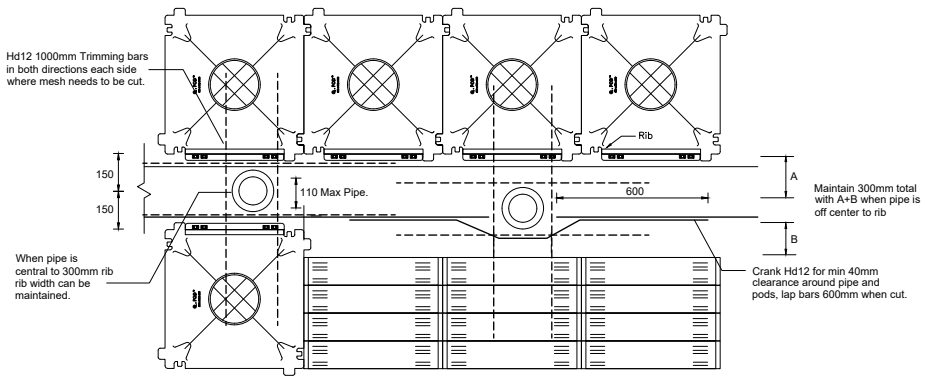


THICKENING - PENETRATIONS


**Contact Us:**
15 Thames Street, Pandora, Napier 4110, New Zealand

PH+64 6 835 5463
Fax +64 6 835 0693
NZ Free0800 55 33 00
wwww.qpod.nz